Programmable EIB/KNX DALI Switch-Dim-Actuator

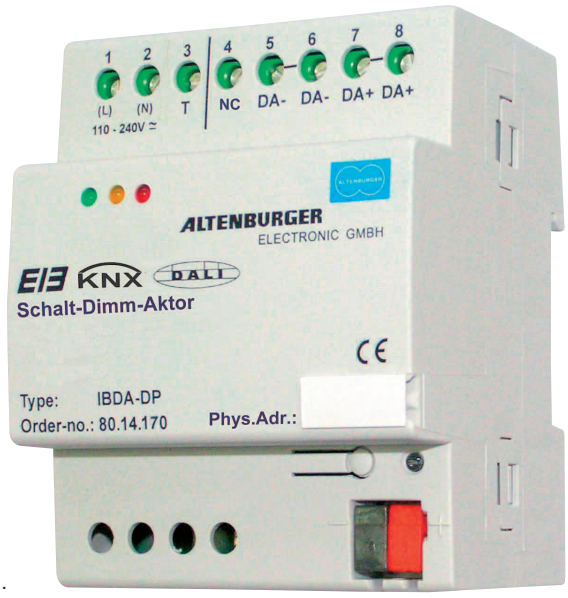

Type : IBDA-DP
Order-No. : 80.14.170

Application and function

The EIB/KNX DALI switch-dim-actuator is suitable for the control of max. 100 DALI ballasts or transformers and digital → analog converters. It performs the following functions:

- The integration of DALI ballasts or transformers into EIB-Lighting systems. DALI ballasts are being switched and dimmed with EIB/KNX DALI switch-dim-actuators.
- The module has 25 internal scene memories with fade time settings from scene to scene, cleaning and corridor lighting controls. Additionally scenes can be programmed to a sequence and selected accordingly (scene sequence control). With the combination of 3 EIB/KNX DALI switch-dim-actuators e.g. a colour sequence (RGB) can be programmed. Additionally the EIB/KNX DALI switch-dim-actuator is one of the components for a complete EIB-programmable dimming control system.
  If the number of DALI ballasts or of converters exceeds the number of 100, additional EIB/KNX DALI switch-dim-actuators can be integrated (see system survey pages 32/33).
- The EIB/KNX DALI switch-dim-actuator can be operated with customary EIB-controls or with a suitable visualization. The module however also can be controlled directly with a pushbutton input and a customary pushbutton for mains (1-pushbutton-dim function). Details for the parametrizing and to objects: see application description.
- The actuator includes already the current supply for the interfaces of 100 DALI ballasts.

Scene memory

All 25 internal scene memories can be stored and selected with 1-byte instructions. 8 of the 25 scenes also can be stored and selected with 1-bit-instructions. Through the defined fade control all circuits achieve after the scene selection their final light level at the same time. This provides a smooth transfer from scene to scene.

Scene sequence control

Several scenes can be combined to an automatic sequence. The order of scenes, stops and the number of repetitions can be programmed. Programming is made with the ETS-software or in real time. Up to 2 sequences can be stored and selected with the module. In one sequence 10 stops can be programmed. If 2 sequences are programmed 5 stops can be realized (see software application).

Pushbutton input

There is a possibility to connect a pushbutton for mains (normally open contact to L) for a direct control of the actuator. This function is available also outside the EIB-system. A power supply however (24 V, T/C 50 mA) would be required. An EIB-power supply can be used as well.

EIB-Programmable dimming controls

The internal memories of the dim-actuators provide for a comprehensive programmable dimming control system. With the integration of pre-programmed EIB-dimmers (ALTENBURGER ALTODIM-P) or programmable EIB-switch-dim-actuators (type: IBDA-KP) all dimmable lighting systems can be integrated into the system.

The system comprises:

a. The required EIB-dim-actuators, converters and EIB-dimmers
b. Radio- or IR-sensors for the programming and selection of scenes.
c. One radio or IR-decoder
d. One handheld-radio or IR-programmer (alternatively touch panels or program- and selector panels)
e. One radio or IR-transmitter for the scene selection (if required in parallel to touch panels or pushbutton panels). (Combination of the different components see schematic diagram page 32/33).

Multi-Sensor-Controls, static and dynamic scenes

Into the programmable lighting control system also sensor controls, static and dynamic scene selections can be integrated. ‚Static' means that the respective scene remains unchanged as long as not another scene is selected – independent of the daylight and presence detection. ‚Dynamic' means that a scene smoothly adjusts to the daylight and lighting only burns if motion is recognized. Optionally daylight dependence and motion control also individually can be integrated into the system.

DALI-interface

The DALI-interface of the EIB-dim-actuator supplies all DALI-interfaces at a time. The total current of 250 mA however may not be exceeded. In order to avoid the max. permissible voltage drop on the DALI-wires of 2V according to DALI-definition the wire sections must be in correspondence with the table of the technical data.

Important: The DALI-interface of the EIB-dim-actuators may be used only for DALI-components. Other components with mains at the DALI-interface may not be connected. A combination of the dim-actuators with a mains control causes a destruction of the actuator!

Direction for use

In order to achieve a uniform dimmer curve all DALI ballasts should be of the same type.

Voltage drop, supply, DALI, EIB/KNX

1. In case of a voltage drop lighting is restored at voltage return – after a short delay – into its last set light level. The same applies if the DALI-supply fails.

2. If the supply of the EIB-dim-actuator fails, the connected DALI ballasts or converters are switching the lamps to full brightness. Mains however still must be available. On return of the supply through the Dim-Actuator lighting for a short moment switches OFF and immediately goes back into the last set light level.

3.If the DALI-interface supply fails lighting goes into its brightest level. After return of the supply lighting goes into the last set light level.

4. If the EIB/KNX voltage supply fails the DALI ballasts and converters go into full brightness. In this case the power supply of the DALI ballasts, converters and of the dim-actuator however must still be available. After return of the EIB-supply lighting goes into the light level which has been set in the ETS-software with the parameter ‚bus-voltage return' (see application instructions).

System messages

Operation

The green LED signalizes readiness for operation. The yellow LED indicates DALI-signals.

DALI-Faults

If DALI ballasts are not connected or DALI-wires are interrupted, the red LED flashes twice,
The double flash continues unless the fault is removed.

DALI short circuit

In case of a short circuit on DALI-connections the red LED flashes three times.
This is repeated unless the fault is removed.

Safety and installation instructions

- The device may only be installed by a qualified electrician.
- Work may only be performed only if the device is set voltage-free.
- The device may not be opened respectively may not be put into operation without housing.
- The valid safety and accident prevention regulations must be adhered to.
- Please observe wiring diagrams and technical data.

Technical data EIB/KNX DALI Switch-Dim-Actuator

Designation : EIB/KNX DALI switch-dim-actuator
Type : **IBDA-DP**
Order-No.: : 80.14.170

Power supply : 110V-240V AC 50/60Hz, 110V-240V DC
Own consumption : approx. 0,7 to 5,8W depending on the load
Protection : external 16A
Ambient temperature : 45°C

Protective class : II (protective isolation)
Protective type : IP 20
Contamination degree : 2 (dry, not conductive)

DALI - interface : interface accord. to DALI-specification, interface poled
Current supply for max. 100 DALI-modules approx. 200mA/13V DC (Uo approx. 15V DC)
- Ik<250mA DC, max. 22,5V DC
- electronic current limitation
- DALI–interface basic isolation, **no protective low-voltage -**

Pushbutton input T : max. 240V (pushbutton for mains)

Internal display- : 3x LED: display for module functions 1xEIB/KNX-Programmer-LED
Control units 1xEIB/KNX-Programmer-pushbutton

Terminals : screw terminals: solid or litz wire with sleeve: 0,25-2,5mm^2
supply : L, N Terminals (1, 2)
Pushbutton input : T Terminal (3)
Not connected : NC Terminal (4) (may not be connected)

DALI-interface : DA+ DA- Terminals (7/8, 5/6)
Terminals 7 and 8 are internally connected
Terminals 5 and 6 are internally connected

Wire length : max. 100m
- DALI-wires : max. 300m with 1,5mm^2 or according to table
(distance programmable EIB-Dim-actuator IBDA-DP to DALI ballasts or converters)

Wire section in mm^2	2x0,5	2x0,75	2x1,0	2x1,5
Wire length (distance) in m	100	150	200	300

Housing : Isolation housing for DIN rail systems
Dimensions : WxHxD=72x90x64mm
Weight : approx. 200g

EIB/KNX : contacts with WAGO-plugs
Wiring : EIB/KNX-cables
Supply EIB/KNX : 24VDC (+6V/-3V) EIB/KNX-supply module
Load consumption : max. 290mW at 29VDC
- object / parameters see **application manual -**

Designation : CE, EIB/KNX, DALI

wiring : see wiring diagrams and print at the module

Except to the supply terminals no supply potentials may be connected to the module.All potentials for the control and operation may have a basis isolation.
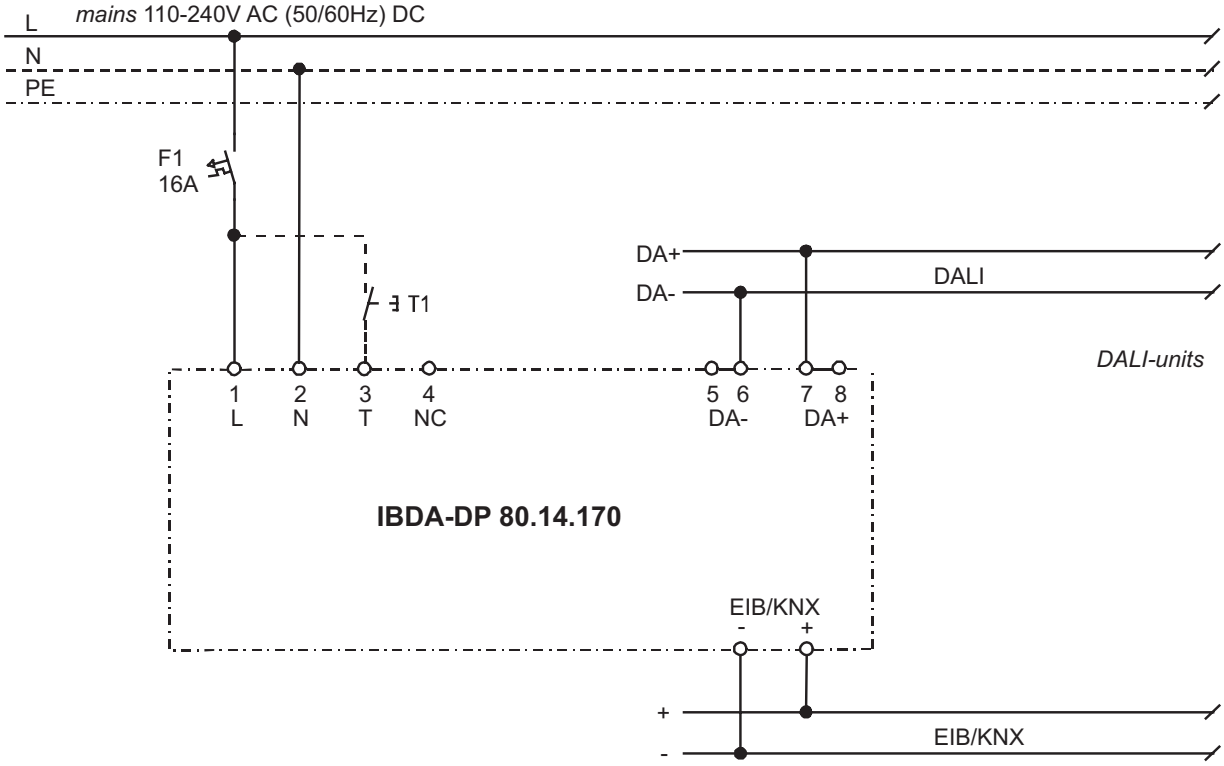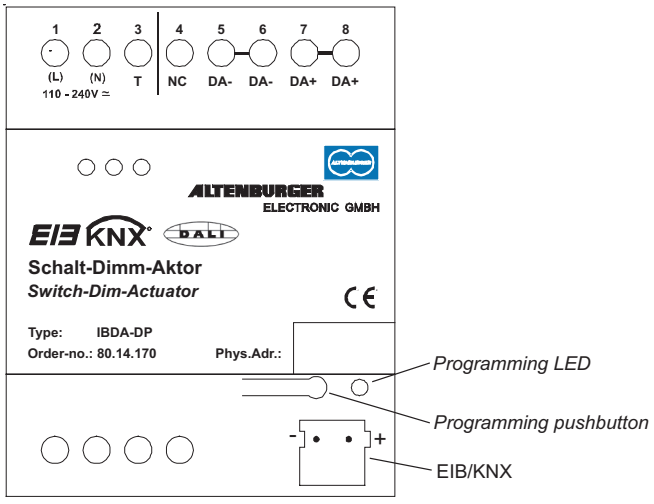
Wiring diagram EIB/KNX DALI Switch-Dim-Actuator, Type IBDA-DP